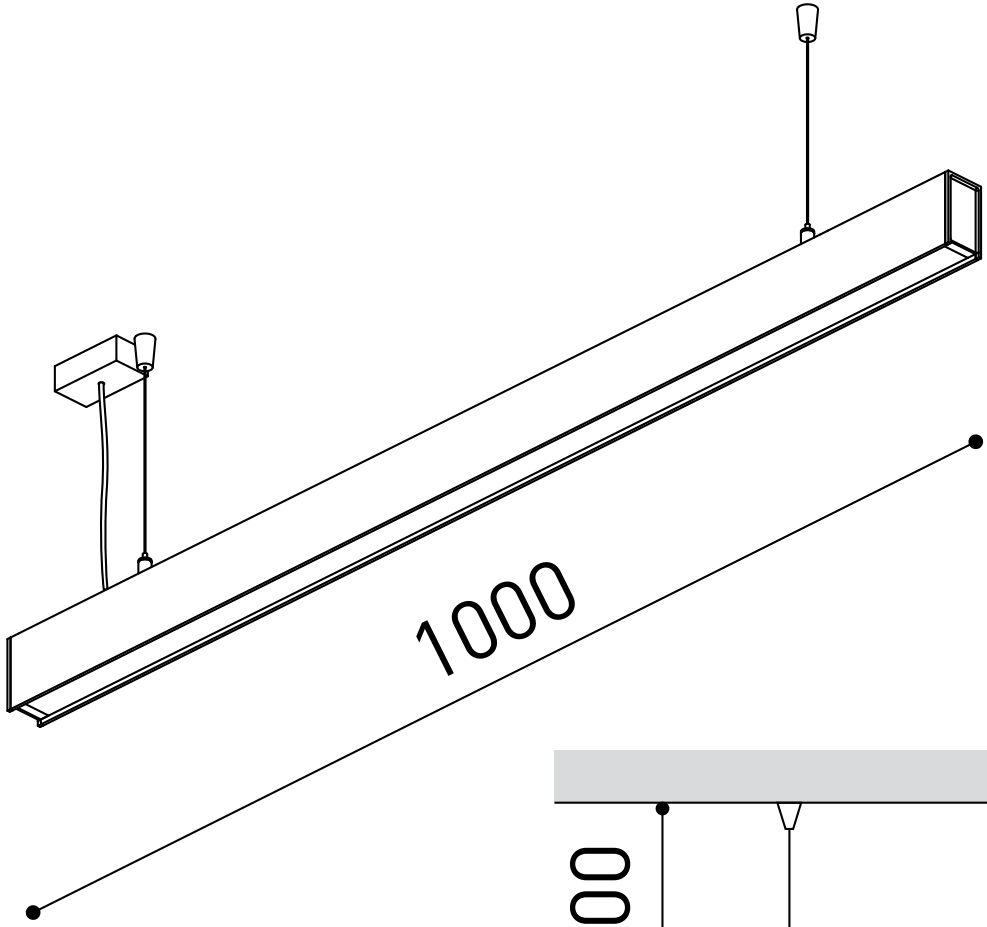
1000

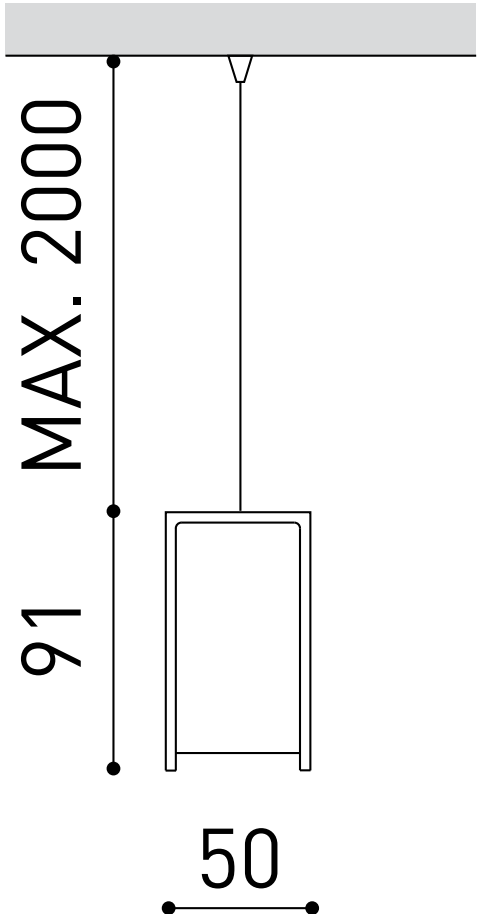
MAX. 2000
91
50