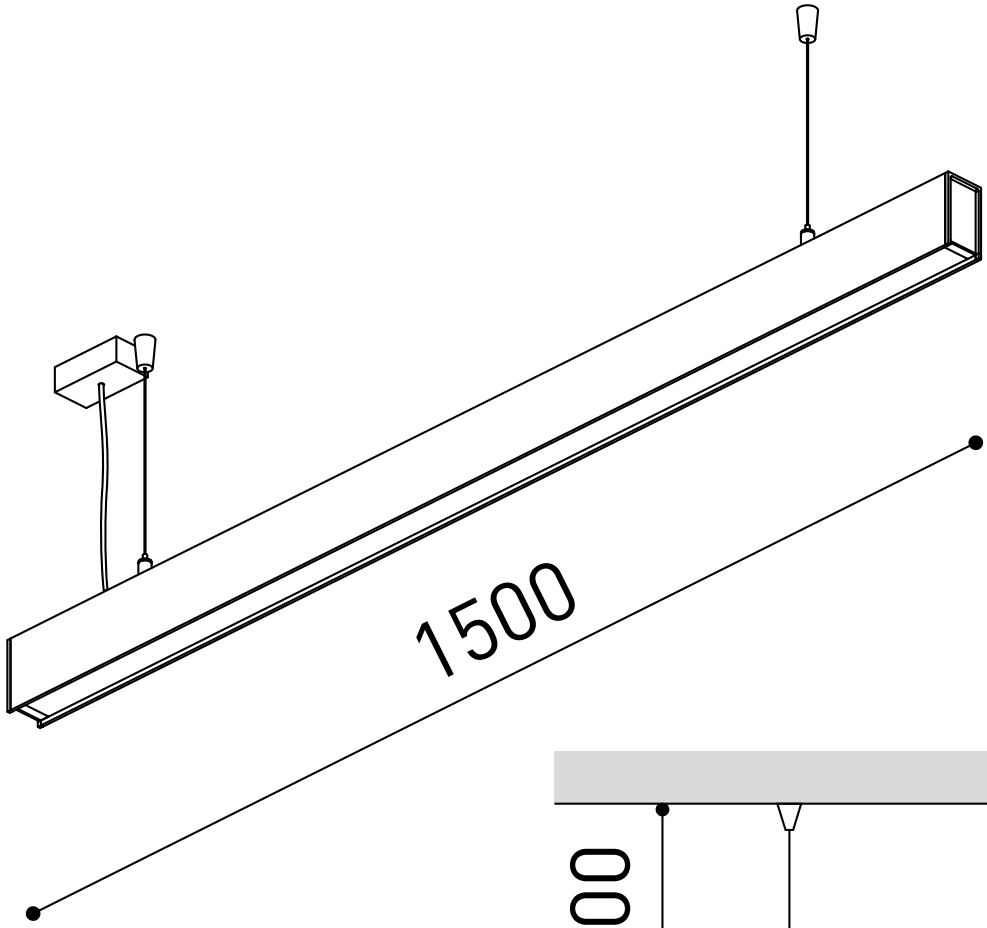
1500

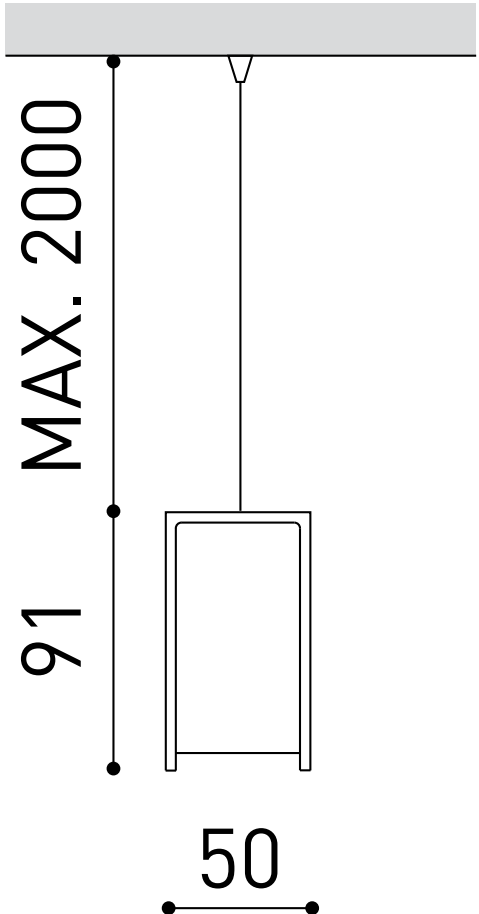
MAX. 2000
91
50