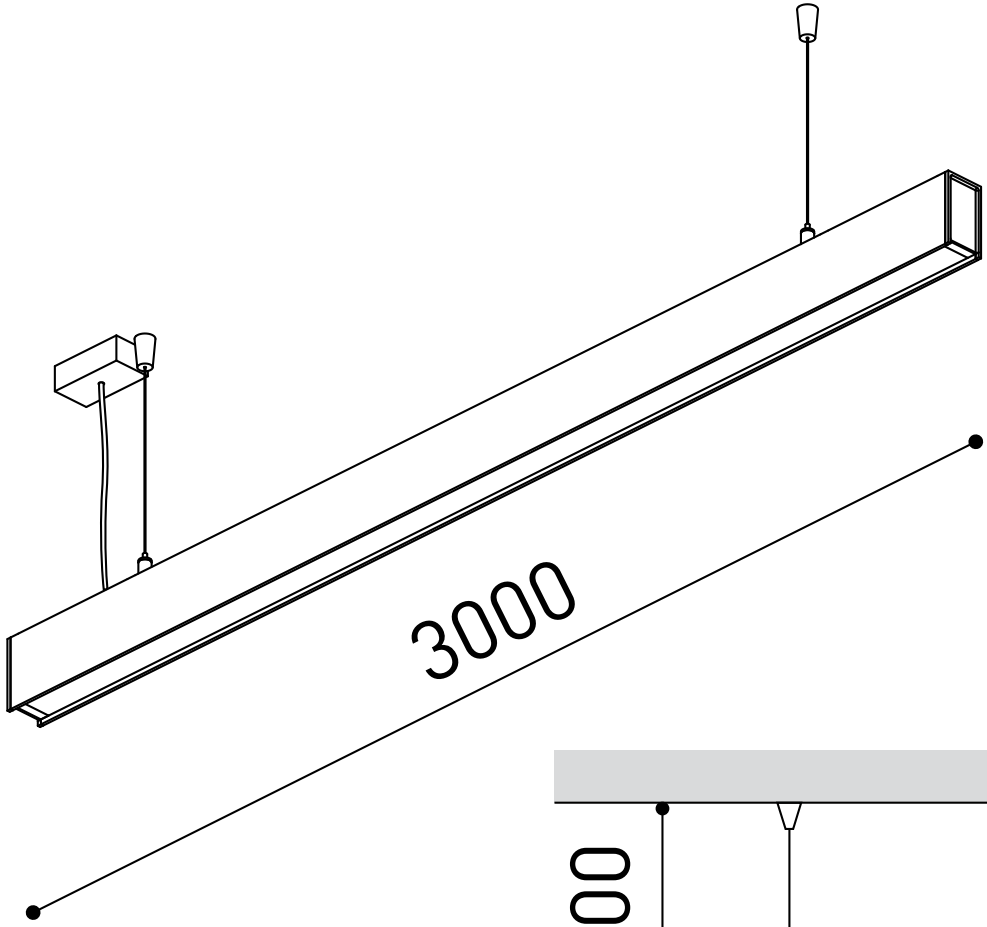
3000

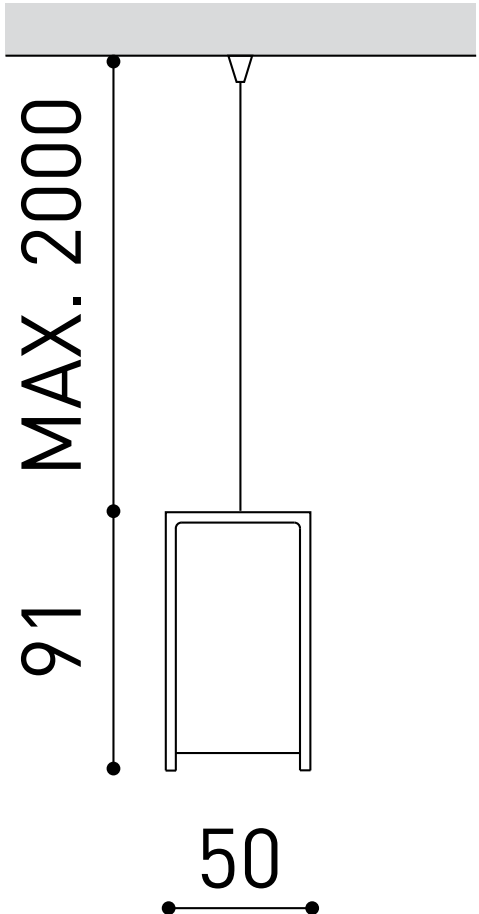
MAX. 2000
91
50